MSW®
MOTOR TECHNICS

USER MANUAL

BEDIENUNGSANLEITUNG
INSTRUKCJA OBSŁUGI
NÁVOD K POUŽITÍ
MANUEL D´UTILISATION
ISTRUZIONI PER L'USO
MANUAL DE INSTRUCCIONES
HASZNÁLATI ÚTMUTATÓ BRUGSANVISNINGENKEL
KÄYTTÖOHJE
GEBRUIKSAANWIJZING
BRUKSANVISNING
INSTRUÇÕES DE UTILIZAÇÃO
POUŽÍVATEĽSKÁ PRÍRUČKA
РЪКОВОДСТВО ЗА УПОТРЕБА
ΟΔΗΓΙΕΣ ΧΡΗΣΗΣ
UPUTE ZA UPORABU
NAUDOJIMO INSTRUKCIJA
MANUAL DE UTILIZARE
NAVODILA ZA UPORABO

ADJUSTABLE ANGLE BRACKET

DE	Produktname	Kernbohrständer
EN	Product name	Adjustable angle bracket
PL	Nazwa produktu	Regulowany statyw kątowy
CZ	Název výrobku	Nastavitelný úhlový držák
FR	Nom du produit	Support angulaire réglable
IT	Nome del prodotto	Supporto angolare regolabile
ES	Nombre del producto	Soporte angular ajustable
HU	Termék neve	Beállítható szögkonzol
DA	Produktnavn	Justerbar vinkelbeslag
FI	Tuotteen nimi	Säädettävä kulmatuki
NL	Productnaam	Verstelbare hoekbeugel
NO	Produktnavn	Justérbar vinkelbeslag
SE	Produktnamn	Justerbar vinkelbeslag
PT	Nome do produto	Suporte angular ajustável
SK	Názov produktu	Nastaviteľný uhlový držiak
BG	Име на продукта	Регулируема ъглова скоба
EL	Όνομα προϊόντος	Προσαρμοζόμενη γωνιακή βραχίονα
HR	Naziv proizvoda	Podesivi kutni nosač
LT	Produkto pavadinimas	Reguliuojamas kampinis laikiklis
RO	Numele produsului	Suport unghiular reglabil
SL	Ime izdelka	Nastavljiv kotni nosilec

DE Modell | **EN** Product model | **PL** Model produktu | **CZ** Model výrobku | **FR** Modèle | **IT** Modello | **ES** Modelo | **HU** Modell | **DA** Model | **FI** Tuotteen malli | **NL** Productmodel | **NO** Produktmodell | **SE** Produktmodell | **PT** Modelo do produto | **SK** Model | **BG** Модел на продукт | **EL** Μοντέλο προϊόντος | **HR** Model proizvoda | **LT:** Gaminio modelis | **RO:** Model de produs | **SL:** Model izdelka	MSW-NNO-TAB3
DE Hersteller | **EN** Manufacturer | **PL** Producent | **CZ** Výrobce | **FR** Fabricant | **IT** Produttore | **ES** Fabricante | **HU** Termelő | **DA** Producent | **FI** Valmistaja | **NL** Producent | **NO** Produsent | **SE** Tillverkare | **PT** Fabricante | **SK** Výrobca | **BG** Производител | **EL** Κατασκευαστής | **HR** Proizvođač | **LT** Gamintojas | **RO** Producător | **SL** Proizvajalec	expondo Polska sp. z o.o. sp. k.
DE Anschrift des Herstellers | **EN** Manufacturer Address | **PL** Adres producenta | **CZ** Adresa výrobce | **FR** Adresse du fabricant | **IT** Indirizzo del produttore | **ES** Dirección del fabricante | **HU** A gyártó címe | **DA** Producentens adresse | **FI** Valmistajan osoite | **NL** Adres producent | **NO** Produsentens adresse | **SE** Tillverkarens adress | **PT** Endereço do fabricante | **SK** Adresa výrobcu | **BG** Адрес на производителя | **EL:** Διεύθυνση κατασκευαστή | **HR** Adresa proizvođača | **LT** Gamintojo adresas | **RO** Adresa producătorului | **SL** Naslov proizvajalca	ul. Nowy Kisielin – Innowacyjna 7, 66-002 Zielona Góra | Poland, EU

⚠

This User Manual has been translated using machine translation. We have made every effort to ensure the translation is accurate, but please note that automated translations are not perfect and are not meant to replace human translators. The official version of the User Manual is in English. Any differences between the translated version and the original English are not legally binding. If you have any questions about the accuracy of the translation, please refer to the English version, which is the official reference. More language versions are available upon request via info@expondo.com.

1. Technical data

Table 1: Technical data of the product

Parameter description	Parameter value
Product name	Adjustable angle bracket
Model	MSW-NNO-TAB3
Dimensions [width x depth x height; mm]	340 x 560 x 1140
Weight [kg]	30.05

2. General description

The user manual is designed to assist in the safe and trouble-free use of the device. The product is designed and manufactured in accordance with strict technical guidelines, using state-of-the-art technologies and components. Additionally, it is produced in compliance with the most stringent quality standards.

DO NOT USE THE DEVICE UNLESS YOU HAVE THOROUGHLY READ AND UNDERSTOOD THIS USER MANUAL.

To increase the product life of the device and to ensure trouble-free operation, use it in accordance with this user manual and regularly perform maintenance tasks. The technical data and specifications in this user manual are up to date. The manufacturer reserves the right to make changes associated with quality improvement. The device is designed to reduce noise emission risks to a minimum, taking into account technological progress and noise reduction opportunities.

2.1. Legend

Icon	Description
CE	The product satisfies the relevant safety standards.
	Read instructions before use.
	The product must be recycled.

	**WARNING!** or **CAUTION!** or **REMEMBER!** Applicable to the given situation. (general warning sign)
	Use ear protection. Exposure to loud noise may result in hearing loss.
	Wear protective goggles.
	Wear a dust mask (respiratory tract protection).
	Wear protective gloves.
	Wear head and face protection.
	Wear head protection.
	ATTENTION! Loud noise warning!



PLEASE NOTE! DRAWINGS IN THIS MANUAL ARE FOR ILLUSTRATION PURPOSES ONLY AND IN SOME DETAILS MAY DIFFER FROM THE ACTUAL PRODUCT.

3. Usage safety



ATTENTION! READ ALL SAFETY WARNINGS AND ALL INSTRUCTIONS. FAILURE TO FOLLOW THE WARNINGS AND INSTRUCTIONS MAY RESULT IN SERIOUS INJURY OR EVEN DEATH.

The terms "device" or "product" are used in the warnings and instructions to refer to:

Adjustable angle bracket

3.1. Safety in the workplace

a) Make sure the workplace is clean and well lit. A messy or poorly lit workplace may lead to accidents. Try to think ahead, observe what is going on and use common sense when working with the device.

b) Do not use the device in a potentially explosive environment, for example in the presence of flammable liquids, gases or dust. The device generates sparks which may ignite dust or fumes.

c) If you discover damage or irregular operation, immediately switch the device off and report it to a supervisor without delay.

d) If you are unsure about whether the product is operating correctly or if you find damage, please contact the manufacturer's service centre.

e) Only the manufacturer's service centre may make repairs to the product. Do not attempt to make repairs yourself!

f) In case of fire, use a powder or carbon dioxide (CO_2) fire extinguisher (one intended for use on live electrical devices) to put it out.

g) Children or unauthorised persons are forbidden to enter a work station. A distraction may result in loss of control over the device.

h) Use the device in a well-ventilated space.

i) Regularly inspect the condition of the safety labels. If the labels are illegible, they must be replaced.

j) Please keep this manual available for future reference. If this device is passed on to a third party, the manual must be passed on with it.

k) Keep packaging elements and small assembly parts in a place not available to children.

l) Keep the device away from children and animals.

m) If this device is used together with another equipment, the remaining instructions for use shall also be followed.



REMEMBER! WHEN USING THE DEVICE, PROTECT CHILDREN AND OTHER BYSTANDERS.

3.2. Personal safety

a) Do not use the device when tired, ill or under the influence of alcohol, narcotics or medication which can significantly impair the ability to operate the device.

b) The machine may be operated by physically fit persons who are able to handle the machine, are properly trained, who have reviewed this operating manual and have received training in occupational health and safety.

c) When working with the device, use common sense and stay alert. Temporary loss of concentration while using the device may lead to serious injuries.

d) Use personal protective equipment as required for working with the device, specified in section 1 "Legend". The use of correct and approved personal protective equipment reduces the risk of injury.

e) Do not overestimate your abilities. When using the device, keep your balance and remain stable at all times. This will ensure better control over the device in unexpected situations.

f) Do not wear loose clothing or jewellery. Keep hair, clothes and gloves away from moving parts. Loose clothing, jewellery or long hair may get caught in moving parts.

g) If suction is to be connected to the device, check all connections and make sure they are tight. Using a dedusting system may reduce the risks associated with dust.

h) Remove all adjusting tools or spanners before turning the device on. A tool or spanner left in the revolving part of the device may cause injury.

i) Compressed air may cause serious injury.

j) Use eye, ear and respiratory protection.

k) The device is not a toy. Children must be supervised to ensure that they do not play with the device.

l) Do not put your hands or other items inside the device while it is in use!

3.3. Safe device use

a) Do not overload the device. Use the appropriate tools for the given task. A correctly-selected device will perform the task for which it was designed better and in a safer manner.

b) When not in use, store in a safe place, away from children and people not familiar with the device who have not read the user manual. The device may pose a hazard in the hands of inexperienced users.

c) Keep the device in perfect technical condition. Before each use check for general damage, especially check moving components for cracked parts or elements, and for any other conditions which may impact the safe operation of the device. If damage is discovered, hand over the device for repair before use.

d) Keep the device out of the reach of children.

e) Device repair or maintenance should be carried out by qualified persons, only using original spare parts. This will ensure safe use.

f) To ensure the operational integrity of the device, do not remove factory-fitted guards and do not loosen any screws.

g) When transporting and handling the device between the warehouse and the destination, observe the occupational health and safety principles for manual transport operations which apply in the country where the device will be used.

h) Avoid situations where the device stops working during use due to excessive loading. This may result in overheating of the drive elements and damage to the device.

i) Do not touch articulated parts or accessories unless the device has been disconnected from the power source.

j) Do not move, adjust or rotate the device in the course of work.

k) Do not leave this appliance unattended while it is in use.

l) Clean the device regularly to prevent stubborn grime from accumulating.

m) The specified vibrations emission was measured using standard measurement methods. Vibrations emissions may change if the device is used in different surroundings.

n) Do not work on two workpieces at the same time.

o) Only use air to supply the device, do not use any other gases.

p) The device is not a toy. Cleaning and maintenance may not be carried out by children without supervision by an adult person.

q) Do not run the device when empty.

r) It is forbidden to interfere with the structure of the device in order to change its parameters or construction.

s) Keep the device away from sources of fire and heat.

t) Do not exceed the maximum permissible operating pressure!

u) Before performing deep or through-hole drilling, ensure that the exit side of the material is clearly visible, secured, and cordoned off. This is essential to prevent potential injury or damage when the drill bit emerges.



ATTENTION! DESPITE THE SAFE DESIGN OF THE DEVICE AND ITS PROTECTIVE FEATURES, AND DESPITE THE USE OF ADDITIONAL ELEMENTS PROTECTING THE OPERATOR, THERE IS STILL A SLIGHT RISK OF ACCIDENT OR INJURY WHEN USING THE DEVICE. STAY ALERT AND USE COMMON SENSE WHEN USING THE DEVICE.

4. Use guidelines

The product is designed for securely mounting core drills at variable angles to enable precise angled drilling.

The user is liable for any damage resulting from unintended use of the device.

4.1. Preparing for use

4.1.1. Appliance location

The ambient temperature must not exceed 45°C and the relative humidity should not exceed 85%. Only use the device in well-ventilated areas. Do not obstruct the air outlet of the device. Keep the device away from any hot surfaces. The device should always be used when positioned on an even, stable, clean, fireproof and dry surface, and be out of the reach of children and persons with limited mental and sensory functions.

Disassemble the device and all its components and clean them before the first use.

4.2. Assembling and operating the device

4.2.1. Stand installation

There are two ways to install the stand:

1) Vacuum suction plate fixation

2) Expansion bolt or anchor fixation

WARNING!

The vacuum suction plate must not be used for ceiling or wall drilling. Improper or negligent use may result in serious or fatal injury. When using the vacuum suction plate, ensure the contact surface is non-porous, flat and solid. Also make sure the vacuum pump generates sufficient suction to securely fix the vacuum suction plate.

1) Vacuum suction plate fixation

- Install the vacuum seal onto the base of the stand.
- Connect the vacuum pump to the quick vacuum connection.
- Position the base in the desired location.
- Start the vacuum pump and ensure the pressure reaches at least **635 mmHg (25 inches)** to achieve a secure seal between the base and the surface.

2) Expansion bolt or anchor fixation

- Drill a hole at the marked position for the expansion bolt or anchor.
- Insert and tighten the bolt to firmly secure the base.
- Carefully check whether the bolt is fixed correctly.
- Use a spanner to adjust the base screws to level the base according to the surface.

NOTICE!

When installing the stand on a wall, it is recommended to remove the motor head first.

- Install and fix the stand securely on the wall.
- After the stand is properly fixed, re-install the motor head and ensure all screws are fully tightened.
- If necessary, use a spiral crane to adjust the motor assembly to the appropriate height for installation.

4.2.2. Connection block

When using a large drill bit, a connection block must be installed to create sufficient distance between the drill bit and the stand. Available connection block sizes include 30 mm, 60 mm, and 100 mm for your reference. Multiple blocks can be combined to achieve the required spacing.

Use four bolts to securely attach the connection block to the lifting assembly. Ensure all bolts are fully tightened. Then, mount the motor assembly onto the connection block and fasten it securely.

WARNING! TIGHTEN ALL THE BOLTS BEFORE USING THE MACHINE.

4.3. Cleaning and maintenance

4.3.1. General instructions

a) Unplug the mains plug and allow the device to cool completely before each cleaning, adjustment or replacement of accessories, or if the device is not being used.

- Wait for the rotating elements to stop.

b) Use only non-corrosive cleaners to clean the surface.

c) After cleaning the device, all parts should be dried completely before using it again.

d) Store the unit in a dry, cool place, free from moisture and direct exposure to sunlight.

e) Do not spray the device with a water jet or submerge it in water.

f) The device must be regularly inspected to check its technical efficiency and spot any damage.

g) Use a soft, damp cloth for cleaning.

h) Do not use sharp and/or metal objects for cleaning (e.g. a wire brush or a metal spatula) because they may damage the surface material of the appliance.

i) Do not clean the device with an acidic substance, agents of medical purposes, thinners, fuel, oils or other chemical substances because it may damage the device.

4.3.2. Disposing of used devices

Do not dispose of this device in municipal waste systems. Hand it over to an electric and electrical device recycling and collection point. Check the symbol on the product, instruction manual and packaging. The plastics used to construct the device can be recycled in accordance with their markings. By choosing to recycle you are making a significant contribution to the protection of our environment.

Contact local authorities for information on your local recycling facility.

4.4. Parts list

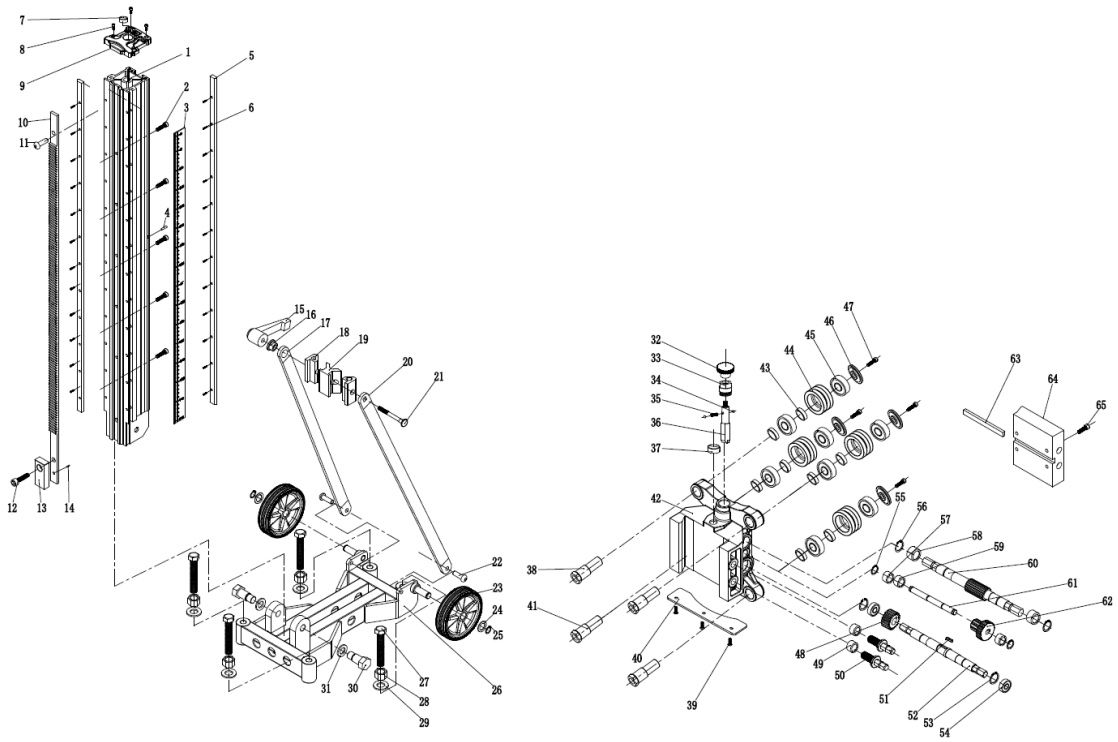

Table 2: Spare parts list

No.	Description	Qty.	Specification
1	Square aluminium tube	1	84*86*1050
2	Hex socket screw	5	M6*12
3	Scale label	2	-
4	Cylindrical pin	2	Ø5*15
5	V-shaped edge strip	2	-
6	Hex socket screw	24	M5*20
7	Level	1	Ø18*8
8	Hex socket screw	4	M4*10
9	Top cover	1	-
10	Rack	1	20*12*1025 (M2)
11	Round head hex socket screw	1	M8*15
12	Hex socket screw	1	M8*25
13	Limit block	1	-
14	Cylindrical pin	1	Ø5*15
15	Adjustable handle	1	M10*110
16	Stepped washer	1	-
17	Pull rod (round hole)	1	-
18	Side locking block	2	-
19	Inner locking block	1	-
20	Pull rod (square hole)	1	-
21	Carriage bolt	1	M10*110
22	Half round head hex socket screw	2	M10*30
23	Roller	2	-

24	Washer	2	16.5*29*2
25	Shaft collar	2	-
26	Base	1	-
27	Hex bolt	4	M16*80 (Full tooth)
28	Nut	4	M16
29	Flat washer	4	M16*2.5
30	Hex screw	2	-
31	Flat washer	2	16.5*29*2
32	Locking knob	1	-
33	Locking sleeve	1	-
34	Steel ball	2	Ø4
35	Spring	1	Ø4*12
36	Locking rod	1	-
37	Spirit level	1	Ø15*6
38	Wheel shaft	1	-
39	Stainless steel large flat head screw	3	M5*10
40	Stop plate	1	-
41	Eccentric shaft	1	-
42	Lifter	1	-
43	Iron ring	8	-
44	Roller	4	-
45	Bearing	8	-
46	Cover plate	4	-
47	Hex socket screw	4	M8*20
48	Lifting gear	1	-
49	Fixed sleeve	2	-
50	Locking screw	2	-
51	Square pin	1	5*16
52	Lifting shaft	1	-
53	External snap ring	1	-
54	Bearing	2	6902
55	External snap ring	2	-
56	External snap ring	4	-
57	Bronze sleeve	2	-
58	Bronze sleeve	2	-
59	Roller	1	-
60	Lifting shaft	1	-
61	Lifting shaft	1	-
62	Drive gear	1	-
63	Square pin	1	10*10*95
64	Aluminium block	1	-
65	Hex socket screw	4	M8*40

Umwelt – und Entsorgungshinweise

Hersteller an Verbraucher

Sehr geehrte Damen und Herren,

gebrauchte Elektro – und Elektronikgeräte dürfen gemäß europäischer Vorgaben **[1]** nicht zum unsortierten Siedlungsabfall gegeben werden, sondern müssen getrennt erfasst werden. Das Symbol der Abfalltonne auf Rädern weist auf die Notwendigkeit der getrennten Sammlung hin. Helfen auch Sie mit beim Umweltschutz. Sorgen Sie dafür, dieses Gerät, wenn Sie es nicht mehr weiter nutzen wollen, in die hierfür vorgesehenen Systeme der Getrenntsammlung zu geben.



In Deutschland sind Sie gesetzlich **[2]** verpflichtet, ein Altgerät einer vom unsortierten Siedlungsabfall getrennten Erfassung zuzuführen. Die öffentlich – rechtlichen Entsorgungsträger (Kommunen) haben hierzu Sammelstellen eingerichtet, an denen Altgeräte aus privaten Haushalten ihres Gebietes für Sie kostenfrei entgegengenommen werden. Möglicherweise holen die rechtlichen Entsorgungsträger die Altgeräte auch bei den privaten Haushalten ab.

Bitte informieren Sie sich über Ihren lokalen Abfallkalender oder bei Ihrer Stadt – oder Gemeindeverwaltung über die in Ihrem Gebiet zur Verfügung stehenden Möglichkeiten der Rückgabe oder Sammlung von Altgeräten.

[1] RICHTLINIE 2002/96/EG DES EUROPÄISCHEN PARLAMENTS UND DES RATES ÜBER ELEKTRO – UND ELEKTRONIK – ALTGERÄTE

[2] Gesetz über das Inverkehrbringen, die Rücknahme und die umweltverträgliche Entsorgung von Elektro – und Elektronikgeräten (Elektro – und Elektronikgerätegesetz – ElektroG).

Utylizacja produktu

Produkty elektryczne i elektroniczne po zakończeniu okresu eksploatacji wymagają segregacji i oddania ich do wyznaczonego punktu odbioru. Nie wolno wyrzucać produktów elektrycznych razem z odpadami gospodarstwa domowego. Zgodnie z dyrektywą WEEE 2012/19/UE obowiązującą w Unii Europejskiej, urządzenia elektryczne i elektroniczne wymagają segregacji i utylizacji w wyznaczonych miejscach. Dbając o prawidłową utylizację, przyczyniasz się do ochrony zasobów naturalnych i zmniejszasz negatywny wpływ oddziaływania na środowisko, człowieka i otoczenie. Zgodnie z krajowym prawodawstwem, nieprawidłowe usuwanie odpadów elektrycznych i elektronicznych może być karane!

For the disposal of the device please consider and act according to the national and local rules and regulations.

CONTACT

expondo Polska sp. z o.o. sp. k.

ul. Nowy Kisielin – Innowacyjna 7
66-002 Zielona Góra | Poland, EU

e-mail: info@expondo.com