MSW®
MOTOR TECHNICS

USER MANUAL

BEDIENUNGSANLEITUNG
INSTRUKCJA OBSŁUGI
NÁVOD K POUŽITÍ
MANUEL D´UTILISATION
ISTRUZIONI PER L'USO
MANUAL DE INSTRUCCIONES
HASZNÁLATI ÚTMUTATÓ BRUGSANVISNINGENKEL KÄYTTÖOHJE GEBRUIK
SAANWIJZING
BRUKSANVISNING
INSTRUÇÕES DE UTILIZAÇÃO
POUŽÍVATEĽSKÁ PRÍRUČKA
РЪКОВОДСТВО ЗА УПОТРЕБА
ΟΔΗΓΙΕΣ ΧΡΗΣΗΣ
UPUTE ZA UPORABU
NAUDOJIMO INSTRUKCIJA
MANUAL DE UTILIZARE
NAVODILA ZA UPORABO

DRYWALL ELEVATOR

DE	Produktname	Trockenbau lift
EN	Product name	Drywall elevator
PL	Nazwa produktu	Montarzownica do płyt kartonowo-gipsowych
CZ	Název výrobku	Zvedák pro sádrokartonové desky
FR	Nom du produit	Élévateur pour plaques de plâtre
IT	Nome del prodotto	Elevatore per cartongesso
ES	Nombre del producto	Elevador para paneles de yeso
HU	Termék neve	Gipszkarton emelő
DA	Produktnavn	Tørvægselevator
FI	Tuotteen nimi	Kipsilevyhissi
NL	Productnaam	Gipsplaatlift
NO	Produktnavn	Tørrgipsheis
SE	Produktnamn	Gipsskivselevator
PT	Nome do produto	Elevador para placas de gesso
SK	Názov produktu	Zdvíhací zariadenie na sadrokartón
BG	Име на продукта	Асансьор за гипсокартон
EL	Όνομα προϊόντος	Ανελκυστήρας γυψοσανίδων
HR	Naziv proizvoda	Dizalica za gipsane ploče
LT	Produkto pavadinimas	Gipso kartono keltuvas
RO	Numele produsului	Elevator pentru placi de gips
SL	Ime izdelka	Dvigalo za mavčne plošče
DE Modell | **EN** Product model | **PL** Model produktu | **CZ** Model výrobku | **FR** Modèle | **IT** Modello | **ES** Modelo | **HU** Modell | **DA** Model | **FI** Tuotteen malli | **NL** Productmodel | **NO** Produktmodell | **SE** Produktmodell | **PT** Modelo do produto | **SK** Model | **BG** Модел на продукт | **EL** Μοντέλο προϊόντος | **HR** Model proizvoda | **LT:** Gaminio modelis | **RO:** Model de produs | **SL:** Model izdelka	MSW-LIDR-5Q	
DE Hersteller | **EN** Manufacturer | **PL** Producent | **CZ** Výrobce | **FR** Fabricant | **IT** Produttore | **ES** Fabricante | **HU** Termelő | **DA** Producent | **FI** Valmistaja | **NL** Producent | **NO** Produsent | **SE** Tillverkare | **PT** Fabricante | **SK** Výrobca | **BG** Производител | **EL** Κατασκευαστής | **HR** Proizvođač | **LT** Gamintojas | **RO** Producător | **SL** Proizvajalec	expondo Polska sp. z o.o. sp. k.	
DE Anschrift des Herstellers | **EN** Manufacturer Address | **PL** Adres producenta | **CZ** Adresa výrobce | **FR** Adresse du fabricant | **IT** Indirizzo del produttore | **ES** Dirección del fabricante | **HU** A gyártó címe | **DA** Producentens adresse | **FI** Valmistajan osoite | **NL** Adres producent | **NO** Produsentens adresse | **SE** Tillverkarens adress | **PT** Endereço do fabricante | **SK** Adresa výrobcu | **BG** Адрес на производителя | **EL:** Διεύθυνση κατασκευαστή | **HR** Adresa proizvođača | **LT** Gamintojo adresas | **RO** Adresa producătorului | **SL** Naslov proizvajalca	ul. Nowy Kisielin – Innowacyjna 7, 66-002 Zielona Góra | Poland, EU	

This User Manual has been translated using machine translation. We have made every effort to ensure the translation is accurate, but please note that automated translations are not perfect and are not meant to replace human translators. The official version of the User Manual is in English. Any differences between the translated version and the original English are not legally binding. If you have any questions about the accuracy of the translation, please refer to the English version, which is the official reference. More language versions are available upon request via info@expondo.com.

Technical data

Parameter description	Parameter value
Product name	Drywall elevator
Model	MSW-LIDR-5Q
Max load [kg]	65
Dimensions [width x depth x height; mm]	1410 x 1410 x 1720
Weight [kg]	38.4

1. General description

The user manual is designed to assist in the safe and trouble-free use of the device. The product is designed and manufactured in accordance with strict technical guidelines, using state-of-the-art technologies and components. Additionally, it is produced in compliance with the most stringent quality standards.

DO NOT USE THE DEVICE UNLESS YOU HAVE THOROUGHLY READ AND UNDERSTOOD THIS USER MANUAL.

To increase the product life of the device and to ensure trouble-free operation, use it in accordance with this user manual and regularly perform maintenance tasks. The technical data and specifications in this user manual are up to date. The manufacturer reserves the right to make changes associated with quality improvement. The device is designed to reduce noise emission risks to a minimum, taking into account technological progress and noise reduction opportunities.

Legend

The product satisfies the relevant safety standards.

Read instructions before use.

The product must be recycled.

WARNING! or **CAUTION!** or **REMEMBER!** Applicable to the given situation.
(general warning sign)

Wear head protection.

ATTENTION! Suspended weight!

PLEASE NOTE! Drawings in this manual are for illustration purposes only and in some details may differ from the actual product.

2. Usage safety

ATTENTION! Read all safety warnings and all instructions. Failure to follow the warnings and instructions may result in serious injury or even death.

The terms "device" or "product" are used in the warnings and instructions to refer to:

Drywall elevator

2.1. Safety in the workplace

a) Make sure the workplace is clean and well lit. A messy or poorly lit workplace may lead to accidents. Try to think ahead, observe what is going on and use common sense when working with the device.

b) Do not use the device in a potentially explosive environment, for example in the presence of flammable liquids, gases or dust.

c) If you discover damage or irregular operation, immediately switch the device off and report it to a supervisor without delay.

d) If you are unsure about whether the product is operating correctly or if you find damage, please contact the manufacturer's service centre.

e) Only the manufacturer's service centre may make repairs to the product. Do not attempt to make repairs yourself!

f) Children or unauthorised persons are forbidden to enter a work station. A distraction may result in loss of control over the device.

g) Regularly inspect the condition of the safety labels. If the labels are illegible, they must be replaced.

h) Please keep this manual available for future reference. If this device is passed on to a third party, the manual must be passed on with it.

i) Keep packaging elements and small assembly parts in a place not available to children.

j) Keep the device away from children and animals.

k) If this device is used together with another equipment, the remaining instructions for use shall also be followed.

l) Always allow the product to reach room temperature before use. If moved from a cold to a warm environment, condensation may form, affecting the brake function.

m) Keep the workspace free of obstructions to prevent accidents.

n) Be mindful of any obstructions above the lift when raising.

Remember! When using the device, protect children and other bystanders.

2.2. Personal safety

a) Do not use the device when tired, ill or under the influence of alcohol, narcotics or medication which can significantly impair the ability to operate the device.

b) The device may be operated by physically fit persons who are able to handle the machine, are properly trained, who have reviewed this operating manual and have received training in occupational health and safety.

c) When working with the device, use common sense and stay alert. Temporary loss of concentration while using the device may lead to serious injuries.

d) Use personal protective equipment as required for working with the device, specified in section 1 “Legend”. The use of correct and approved personal protective equipment reduces the risk of injury.

e) Do not overestimate your abilities. When using the device, keep your balance and remain stable at all times. This will ensure better control over the device in unexpected situations.

f) The device is not a toy. Children must be supervised to ensure that they do not play with the device.

2.3. Safe device use

a) Do not overload the device. Use the appropriate tools for the given task. A correctly-selected device will perform the task for which it was designed better and in a safer manner.

b) When not in use, store in a safe place, away from children and people not familiar with the device who have not read the user manual. The device may pose a hazard in the hands of inexperienced users.

c) Keep the device in perfect technical condition. Before each use check for general damage, especially check moving components for cracked parts or elements, and for any other conditions which may impact the safe operation of the device. If damage is discovered, hand over the device for repair before use.

d) Keep the device out of the reach of children.

e) Device repair or maintenance should be carried out by qualified persons, only using original spare parts. This will ensure safe use.

f) To ensure the operational integrity of the device, do not remove factory-fitted guards and do not loosen any screws.

g) When transporting and handling the device between the warehouse and the destination, observe the occupational health and safety principles for manual transport operations which apply in the country where the device will be used.

h) Do not leave this appliance unattended while it is in use.

i) Clean the device regularly to prevent stubborn grime from accumulating.

j) Do not work on two workpieces at the same time.

k) The device is not a toy. Cleaning and maintenance may not be carried out by children without supervision by an adult person.

l) It is forbidden to interfere with the structure of the device in order to change its parameters or construction.

m) Keep the device away from sources of fire and heat.

n) Ensure that the brake drum is clean and dry before operation.

o) Never use the lift unless both arms are secured with the lock tab.

p) Never use the lift to raise objects other than drywall or similar materials.

ATTENTION! Despite the safe design of the device and its protective features, and despite the use of additional elements protecting the operator, there is still a slight risk of accident or injury when using the device. Stay alert and use common sense when using the device.

3. Use guidelines

The product is designed to help a single person lift a drywall without assistance.

The user is liable for any damage resulting from unintended use of the device.

3.1. Device use

SAFETY CHECK BEFORE USE

Before using the lift each working day, perform the following checks:

1. **Visual Inspection** – Thoroughly examine the lift for any signs of wear and tear, with special attention to the condition of the wire.
2. **Temperature Check** – Ensure the lift has reached room temperature before operation.
3. **Brake Inspection** – Verify that the brake drum is clean and dry.

LOADING A COVERING BOARD

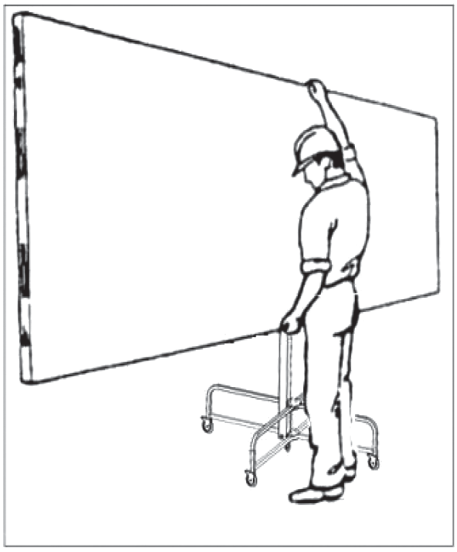

1. **Engage the Reverse Brake** – Flip the reverse brake down to prevent the lift from rolling backward.
2. **Adjust the Support Hooks** – Flip the support hooks on the support arms outward. Ensure that the cradle is positioned so that the support hooks are farthest from the handwheel.
3. **Extend the Outriggers** – Pull out the outriggers on the support arms to provide optimal support for the covering board.
4. **Tilt the Cradle** – Release the clip to allow the cradle to tilt.
5. **Position the Covering Board** – Hold the covering board against the tilted cradle with the outer side facing downward. Lower it onto the support hooks and carefully rest it against the support arms.
6. **Adjust for Installation Angle:**
   - For flat ceilings, tilt the cradle back to the horizontal position and secure the clip to prevent tilting.
   - For sloping walls or ceilings, keep the cradle tilted.
7. **Move the Lift** – Lift the reverse brake on the base and carefully roll the lift to the installation location.

3.2. Cleaning and maintenance

a) Use only non-corrosive cleaners to clean the surface.

b) After cleaning the device, all parts should be dried completely before using it again.

c) The device must be regularly inspected to check its technical efficiency and spot any damage.

d) Use a soft, damp cloth for cleaning.

e) Do not use sharp and/or metal objects for cleaning (e.g. a wire brush or a metal spatula) because they may damage the surface material of the appliance.

f) Do not clean the device with an acidic substance, agents of medical purposes, thinners, fuel, oils or other chemical substances because it may damage the device.

g) Inspect the wire daily before starting work. If there are signs of wear, replace it immediately following the instructions provided with the new wire.

h) Lubricate the wire rollers occasionally to ensure smooth operation.

i) Raise the telescopic sections to access the internal wire rollers.

j) Do not allow oil or grease to come into contact with the brake drum.

k) Lubricate the wheel bearings on the base periodically to maintain performance.

l) If the telescopic sections do not move smoothly, lubricate the exterior with paraffin.

m) Store the plasterboard lift in a clean and dry location when not in use.

3.3. Parts diagram

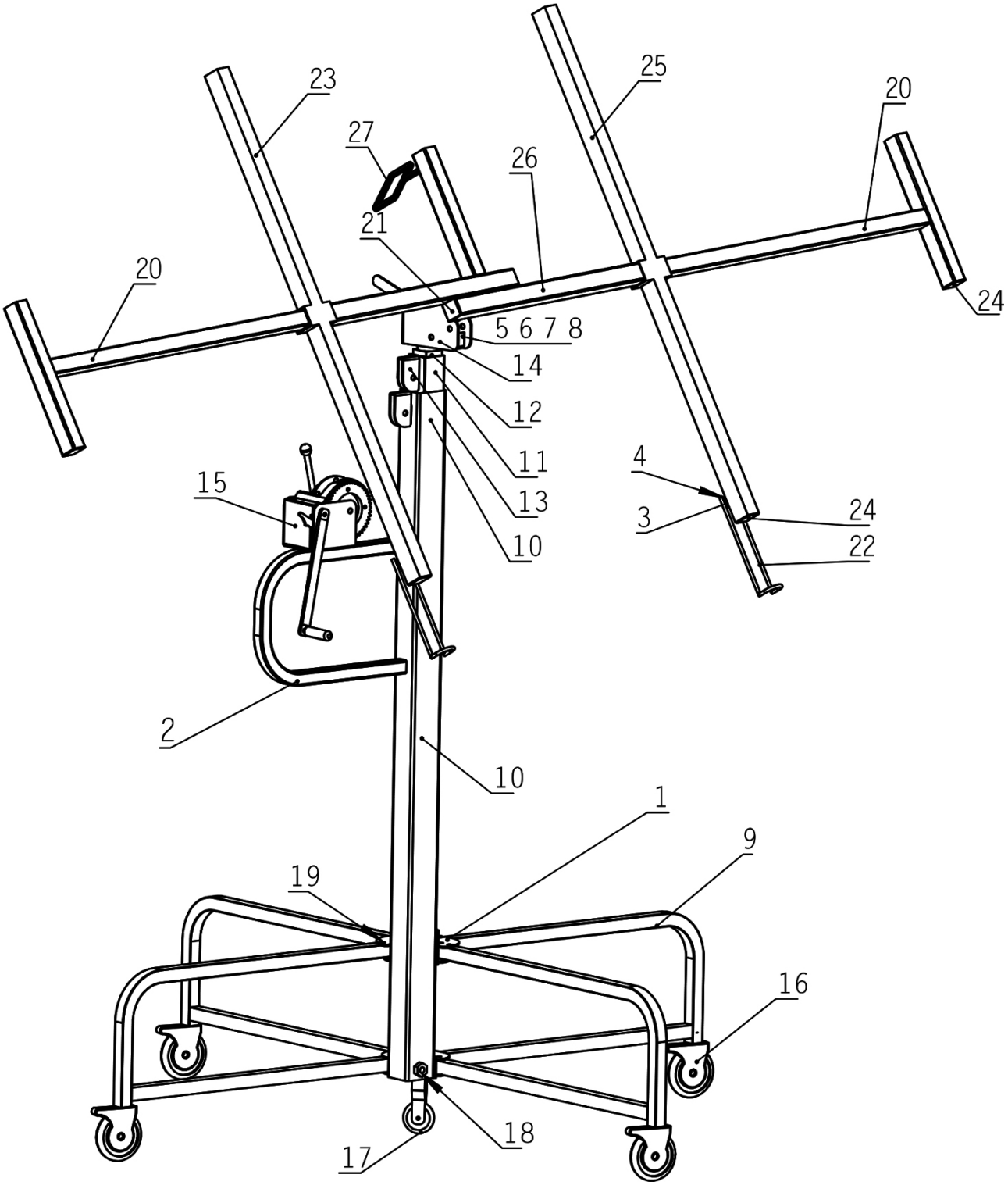

Assembly No.	Description	Number of pieces
1	Main Body Support	1
2	Winch Frame	1
3	Spring 1	2
4	Coach Spring	1
5	Pin Shaft	3
6	Tension Spring	1

7	Limit Plate	1
8	Steering Box	1
9	Outer Leg	4
10	Frame Housing (Square tube 1)	1
11	Outer Telescoping Section (Square tube 2)	1
12	Inner Telescoping Section (Square tube 3)	1
13	Guide Plate	2
14	Steering Box Assembly	1
15	Winch Assembly	1
16	Universal Wheel	4
17	Support Wheel	1
18	Flower Plugging	5
19	Positioning Pin	4
20	T Tube	2
21	Party Block 1	2
22	Panel Support Lock	2
23	Crossarm body 2	1
24	Party Block 2	8
25	Crossarm body 1	1
26	Cradle Body	1
27	Handle Bar	1

Winch assembly No.	**Description**	**Number of pieces**
1	Grank	1
2	Crank Bar	1
3	Big Gear Wheel	1
4	Pinion	1
5	Front Brake Arm	1
6	Back Brake Arm	1
7	Spring	2
8	Torsion Spring	1
9	Nut	1

Umwelt – und Entsorgungshinweise

Hersteller an Verbraucher

Sehr geehrte Damen und Herren,

gebrauchte Elektro – und Elektronikgeräte dürfen gemäß europäischer Vorgaben **[1]** nicht zum unsortierten Siedlungsabfall gegeben werden, sondern müssen getrennt erfasst werden. Das Symbol der Abfalltonne auf Rädern weist auf die Notwendigkeit der getrennten Sammlung hin. Helfen auch Sie mit beim Umweltschutz. Sorgen Sie dafür, dieses Gerät, wenn Sie es nicht mehr weiter nutzen wollen, in die hierfür vorgesehenen Systeme der Getrenntsammlung zu geben.

In Deutschland sind Sie gesetzlich **[2]** verpflichtet, ein Altgerät einer vom unsortierten Siedlungsabfall getrennten Erfassung zuzuführen. Die öffentlich – rechtlichen Entsorgungsträger (Kommunen) haben hierzu Sammelstellen eingerichtet, an denen Altgeräte aus privaten Haushalten ihres Gebietes für Sie kostenfrei entgegengenommen werden. Möglicherweise holen die rechtlichen Entsorgungsträger die Altgeräte auch bei den privaten Haushalten ab.

Bitte informieren Sie sich über Ihren lokalen Abfallkalender oder bei Ihrer Stadt – oder Gemeindeverwaltung über die in Ihrem Gebiet zur Verfügung stehenden Möglichkeiten der Rückgabe oder Sammlung von Altgeräten.

[1] RICHTLINIE 2002/96/EG DES EUROPÄISCHEN PARLAMENTS UND DES RATES
ÜBER ELEKTRO – UND ELEKTRONIK – ALTGERÄTE

[2] Gesetz über das Inverkehrbringen, die Rücknahme und die umweltverträgliche Entsorgung
von Elektro – und Elektronikgeräten (Elektro – und Elektronikgerätegesetz – ElektroG).

Utylizacja produktu
Produkty elektryczne i elektroniczne po zakończeniu okresu eksploatacji wymagają segregacji i oddania ich do wyznaczonego punktu odbioru. Nie wolno wyrzucać produktów elektrycznych razem z odpadami gospodarstwa domowego. Zgodnie z dyrektywą WEEE 2012/19/UE obowiązującą w Unii Europejskiej, urządzenia elektryczne i elektroniczne wymagają segregacji i utylizacji w wyznaczonych miejscach. Dbając o prawidłową utylizację, przyczyniasz się do ochrony zasobów naturalnych i zmniejszasz negatywny wpływ oddziaływania na środowisko, człowieka i otoczenie. Zgodnie z krajowym prawodawstwem, nieprawidłowe usuwanie odpadów elektrycznych i elektronicznych może być karane!

For the disposal of the device please consider and act according to the national and local rules and regulations.

CONTACT

expondo Polska sp. z o.o. sp. k.

ul. Nowy Kisielin – Innowacyjna 7
66-002 Zielona Góra | Poland, EU

e-mail: info@expondo.com