MSW®
MOTOR TECHNICS

USER MANUAL

BEDIENUNGSANLEITUNG
INSTRUKCJA OBSŁUGI
NÁVOD K POUŽITÍ
MANUEL D´UTILISATION
ISTRUZIONI PER L'USO
MANUAL DE INSTRUCCIONES
HASZNÁLATI ÚTMUTATÓ BRUGSANVISNINGENKEL KÄYTTÖOHJE GEBRUIK
SAANWIJZING
BRUKSANVISNING
INSTRUÇÕES DE UTILIZAÇÃO
POUŽÍVATEĽSKÁ PRÍRUČKA
РЪКОВОДСТВО ЗА УПОТРЕБА
ΟΔΗΓΙΕΣ ΧΡΗΣΗΣ
UPUTE ZA UPORABU
NAUDOJIMO INSTRUKCIJA
MANUAL DE UTILIZARE
NAVODILA ZA UPORABO

EV-BATTERY LIFTER

DE	Produktname	EV Akku-Hubtisch
EN	Product name	EV-battery lifter
PL	Nazwa produktu	Podnośnik do akumulatorów samochodów elektrycznych
CZ	Název výrobku	Výsuvný stůl pro elektromobilní baterie
FR	Nom du produit	Table élévatrice pour batterie de véhicule électrique
IT	Nome del prodotto	Tavolo sollevatore per batterie di veicoli elettrici
ES	Nombre del producto	Mesa elevadora para baterías de vehículos eléctricos
HU	Termék neve	Elektromos jármű akkumulátor-emelőasztal
DA	Produktnavn	EV-batteriløfter
FI	Tuotteen nimi	Sähköajoneuvojen akkujen nostopöytä
NL	Productnaam	Heftafel voor EV-accu's
NO	Produktnavn	EV-batteriheis
SE	Produktnamn	EV-batterilyft
PT	Nome do produto	Mesa elevatória para baterias de veículos elétricos
SK	Názov produktu	Výsuvný stôl pre batérie elektromobilov
BG	Име на продукта	Подемен маса за батерии на електрически превозни средства
EL	Όνομα προϊόντος	Ανελκυστήρας μπαταριών ηλεκτρικών οχημάτων
HR	Naziv proizvoda	Dizalica za baterije električnih vozila
LT	Produkto pavadinimas	EV akumuliatorių kėlimo stalas
RO	Numele produsului	Masă ridicatoare pentru baterii de vehicule electrice
SL	Ime izdelka	Dvigalna miza za baterije električnih vozil

DE Modell | **EN** Product model | **PL** Model produktu | **CZ** Model výrobku | **FR** Modèle | **IT** Modello | **ES** Modelo | **HU** Modell | **DA** Model | **FI** Tuotteen malli | **NL** Productmodel | **NO** Produktmodell | **SE** Produktmodell | **PT** Modelo do produto | **SK** Model | **BG** Модел на продукт | **EL** Μοντέλο προϊόντος | **HR** Model proizvoda | **LT:** Gaminio modelis | **RO:** Model de produs | **SL:** Model izdelka	MSW-EVL-01
DE Hersteller | **EN** Manufacturer | **PL** Producent | **CZ** Výrobce | **FR** Fabricant | **IT** Produttore | **ES** Fabricante | **HU** Termelő | **DA** Producent | **FI** Valmistaja | **NL** Producent | **NO** Produsent | **SE** Tillverkare | **PT** Fabricante | **SK** Výrobca | **BG** Производител | **EL** Κατασκευαστής | **HR** Proizvođač | **LT** Gamintojas | **RO** Producător | **SL** Proizvajalec	expondo Polska sp. z o.o. sp. k.
DE Anschrift des Herstellers | **EN** Manufacturer Address | **PL** Adres producenta | **CZ** Adresa výrobce | **FR** Adresse du fabricant | **IT** Indirizzo del produttore | **ES** Dirección del fabricante | **HU** A gyártó címe | **DA** Producentens adresse | **FI** Valmistajan osoite | **NL** Adres producent | **NO** Produsentens adresse | **SE** Tillverkarens adress | **PT** Endereço do fabricante | **SK** Adresa výrobcu | **BG** Адрес на производителя | **EL:** Διεύθυνση κατασκευαστή | **HR** Adresa proizvođača | **LT** Gamintojo adresas | **RO** Adresa producătorului | **SL** Naslov proizvajalca	ul. Nowy Kisielin – Innowacyjna 7, 66-002 Zielona Góra | Poland, EU

This User Manual has been translated using machine translation. We have made every effort to ensure the translation is accurate, but please note that automated translations are not perfect and are not meant to replace human translators. The official version of the User Manual is in English. Any differences between the translated version and the original English are not legally binding. If you have any questions about the accuracy of the translation, please refer to the English version, which is the official reference. More language versions are available upon request via info@expondo.com.

Technical data

Parameter description	Parameter value
Product name	EV-battery lifter
Model	MSW-EVL-01
Capacity [kg]	1000
Min height [cm]	55
Max height [cm]	175
Dimensions [width x depth x height; mm]	780 x 2100 x 1670
Weight [kg]	270

1. General description

The user manual is designed to assist in the safe and trouble-free use of the device. The product is designed and manufactured in accordance with strict technical guidelines, using state-of-the-art technologies and components. Additionally, it is produced in compliance with the most stringent quality standards.

DO NOT USE THE DEVICE UNLESS YOU HAVE THOROUGHLY READ AND UNDERSTOOD THIS USER MANUAL.

To increase the product life of the device and to ensure trouble-free operation, use it in accordance with this user manual and regularly perform maintenance tasks. The technical data and specifications in this user manual are up to date. The manufacturer reserves the right to make changes associated with quality improvement. The device is designed to reduce noise emission risks to a minimum, taking into account technological progress and noise reduction opportunities.

Legend

The product satisfies the relevant safety standards.

Read instructions before use.

The product must be recycled.

WARNING! or **CAUTION!** or **REMEMBER!** Applicable to the given situation.
(general warning sign)

Wear head protection.

ATTENTION! Hand crush hazard!

ATTENTION! Suspended weight!

PLEASE NOTE! Drawings in this manual are for illustration purposes only and in some details may differ from the actual product.

2. Usage safety

ATTENTION! Read all safety warnings and all instructions. Failure to follow the warnings and instructions may result in serious injury or even death.

The terms "device" or "product" are used in the warnings and instructions to refer to:

EV-battery lifter

2.1. Safety in the workplace

a) Make sure the workplace is clean and well lit. A messy or poorly lit workplace may lead to accidents. Try to think ahead, observe what is going on and use common sense when working with the device.

b) Do not use the device in a potentially explosive environment, for example in the presence of flammable liquids, gases or dust.

c) If you discover damage or irregular operation, immediately switch the device off and report it to a supervisor without delay.

d) If you are unsure about whether the product is operating correctly or if you find damage, please contact the manufacturer's service centre.

e) Only the manufacturer's service centre may make repairs to the product. Do not attempt to make repairs yourself!

f) In case of fire, use a powder or carbon dioxide (CO_2) fire extinguisher (one intended for use on live electrical devices) to put it out.

g) Children or unauthorised persons are forbidden to enter a work station. A distraction may result in loss of control over the device.

h) Regularly inspect the condition of the safety labels. If the labels are illegible, they must be replaced.

i) Please keep this manual available for future reference. If this device is passed on to a third party, the manual must be passed on with it.

j) Keep packaging elements and small assembly parts in a place not available to children.

k) Keep the device away from children and animals.

l) If this device is used together with another equipment, the remaining instructions for use shall also be followed.

m) Only use the product on smooth and flat ground.

Remember! When using the device, protect children and other bystanders.

2.2. Personal safety

a) Do not use the device when tired, ill or under the influence of alcohol, narcotics or medication which can significantly impair the ability to operate the device.

b) The machine may be operated by physically fit persons who are able to handle the machine, are properly trained, who have reviewed this operating manual and have received training in occupational health and safety.

c) When working with the device, use common sense and stay alert. Temporary loss of concentration while using the device may lead to serious injuries.

d) Use personal protective equipment as required for working with the device, specified in section 1 “Legend”. The use of correct and approved personal protective equipment reduces the risk of injury.

e) Do not overestimate your abilities. When using the device, keep your balance and remain stable at all times. This will ensure better control over the device in unexpected situations.

f) The device is not a toy. Children must be supervised to ensure that they do not play with the device.

g) It is strictly forbidden to put hands and feet under the working platform and touch the lifting scissors.

2.3. Safe device use

a) Do not overload the device. Use the appropriate tools for the given task. A correctly-selected device will perform the task for which it was designed better and in a safer manner.

b) When not in use, store in a safe place, away from children and people not familiar with the device who have not read the user manual. The device may pose a hazard in the hands of inexperienced users.

c) Keep the device in perfect technical condition. Before each use check for general damage, especially check moving components for cracked parts or elements, and for any other conditions which may impact the safe operation of the device. If damage is discovered, hand over the device for repair before use.

d) Keep the device out of the reach of children.

e) Device repair or maintenance should be carried out by qualified persons, only using original spare parts. This will ensure safe use.

f) To ensure the operational integrity of the device, do not remove factory-fitted guards and do not loosen any screws.

g) When transporting and handling the device between the warehouse and the destination, observe the occupational health and safety principles for manual transport operations which apply in the country where the device will be used.

h) Do not leave this appliance unattended while it is in use.

i) Clean the device regularly to prevent stubborn grime from accumulating.

j) Do not work on two workpieces at the same time.

k) The device is not a toy. Cleaning and maintenance may not be carried out by children without supervision by an adult person.

l) Do not run the device when empty.

m) It is forbidden to interfere with the structure of the device in order to change its parameters or construction.

n) Riding on the platform vehicle is strictly prohibited.

o) When the platform is raised or not in motion, ensure the foot brake is engaged to prevent unintended movement.

p) Do not move the vehicle or transport goods when the platform is in a raised position.

q) When lowering the platform, pull the control handle slowly to ensure the goods descend smoothly and steadily.

ATTENTION! Despite the safe design of the device and its protective features, and despite the use of additional elements protecting the operator, there is still a slight risk of accident or injury when using the device. Stay alert and use common sense when using the device.

3. Use guidelines

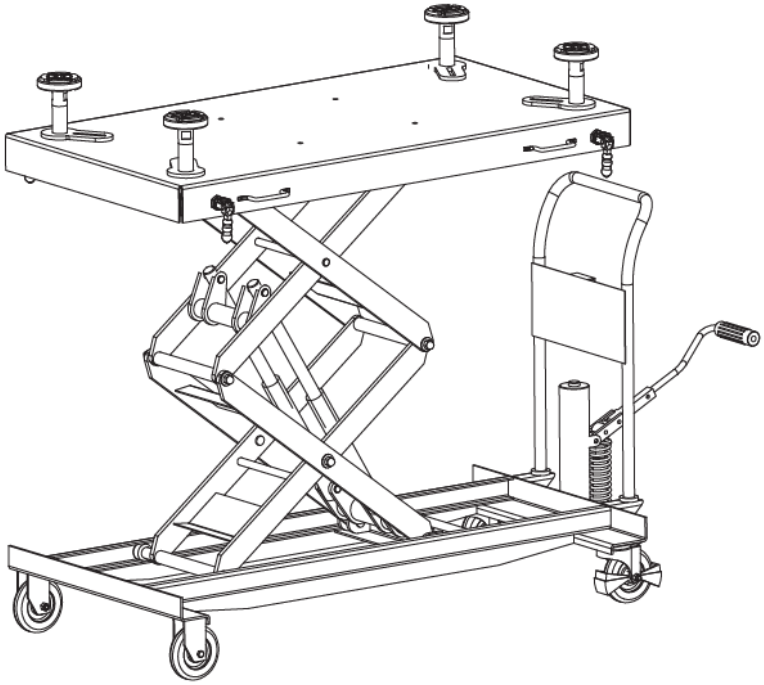

The product is a manual hydraulic scissor-type vehicle designed for lifting and transporting EV batteries. It provides free lifting, flexible movement, and convenient operation. This lifter can be widely used in workshops, warehouses, and other work sites for safe and efficient battery handling.

The user is liable for any damage resulting from unintended use of the device.

3.1. Device use

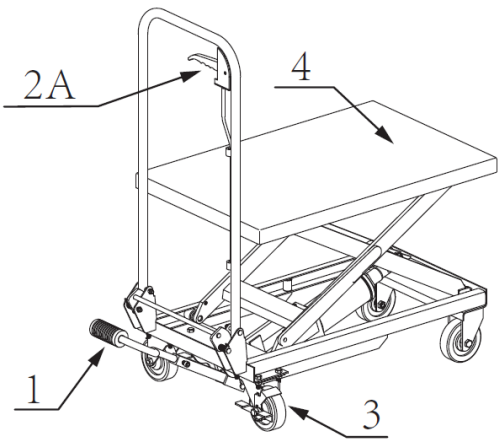

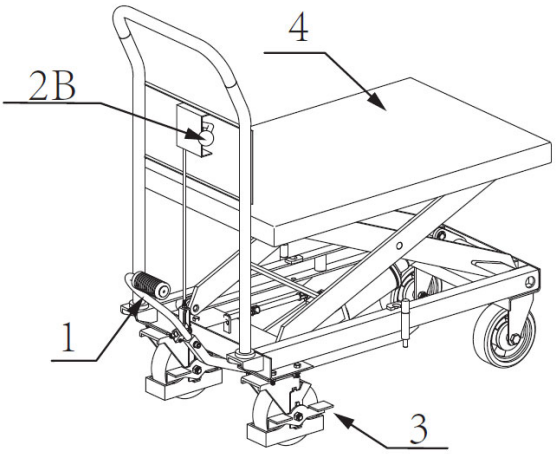

Folding handle **Fixed handle**

1. **Lifting the Platform:**

- Step on the foot handle (1) repeatedly to lift the working platform (4).

2. **Lowering the Platform:**

- Press down the control handle (2B) (for folding handle models, hold control handle (2A) upward) to lower the working platform (4).
- The descending speed can be controlled by adjusting the force applied to the handle.
- Releasing the control handle will stop the platform from descending.

3. **Safety Precaution Before Loading:**

- Always engage the rear wheel brake (3) before loading to prevent accidents.

3.2. Cleaning and maintenance

a) Use only non-corrosive cleaners to clean the surface.

b) After cleaning the device, all parts should be dried completely before using it again.

c) The device must be regularly inspected to check its technical efficiency and spot any damage.

d) Use a soft, damp cloth for cleaning.

e) Do not use sharp and/or metal objects for cleaning (e.g. a wire brush or a metal spatula) because they may damage the surface material of the appliance.

f) Do not clean the device with an acidic substance, agents of medical purposes, thinners, fuel, oils or other chemical substances because it may damage the device.

g) Lubrication: Apply lubricating oil to all friction parts once a month to ensure smooth operation.

h) Wheel Inspection: Regularly check the movement and friction of the wheels and ensure they are in normal working condition.

i) Brake Check: Inspect the rear wheel brake to verify it is functioning effectively.

j) Hydraulic System: Check the hydraulic cylinder regularly for any signs of oil leakage.

TROUBLESHOOTING

Problem	Possible cause	Solution
The platform cannot rise.	- There is no oil in the cylinder. - Oil drain screw or steel ball not in place.	- Add hydraulic oil. - Readjust or clean the drain screw or steel ball.
The platform cannot stop at the rising position and slide down slowly.	Oil drain screw or steel ball not in place.	Readjust or clean the drain screw or steel ball.
The platform cannot descend.	- The seal ring has been damaged. - Loosen the universal joint and rotate it freely. - The drain screw is not open.	- Replace the YXD-type sealing ring. - Check if the universal joint is installed. - Readjust the drain screw.
Oil leakage at drain screw.	O-ring damaged.	Replace the O-ring.
The platform truck cannot lift the rated weight.	The pressure regulating spring is invalid.	Replace the pressure regulating spring.

3.3. Parts diagram

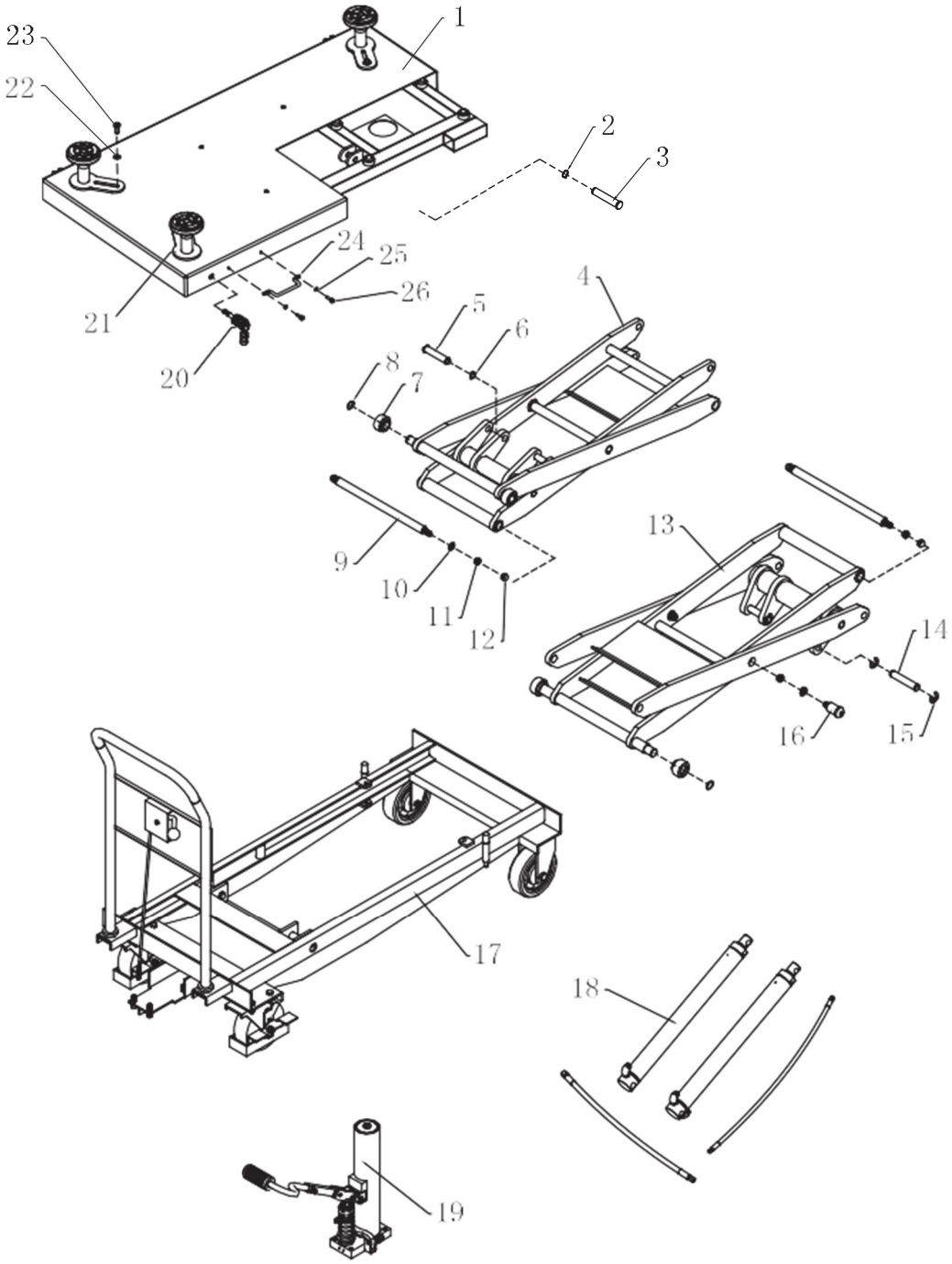

No.	Part name	Qty.	No.	Part name	Qty.	Remarks
1	Platform plate weldment	1	14	Lifting cylinder pin	2	
2	Shaft retaining ring Φ 20	2	15	Split ring Φ 15	4	
3	Platform pin	2	16	Lower central axis	2	
4	Lifting bracket weldment	1	17	Frame assembly	1	See Fig.2 below
5	Lifting rod pin	2	18	Cylinder assembly	1	See Fig.3 below
6	Shaft retaining ring Φ 18	2	19	External cylinder assembly	1	See Fig.4 below
7	Upper and lower rollers	4	20	Fixture	4	
8	Shaft retaining ring Φ 22	4	21	Adjusting tray parts	4	
9	Supporting shaft	2	22	Washer 12	4	
10	Flat cushion Φ 30	6	23	Bolt M12X30	4	
11	Jam nut M12	6	24	Handle	4	

12	Cover nut M12	4	25	Spring washer	8	
13	Lower lifting bracket weldment	1	26	Bolt M8X15	8	

Fig.2 Frame assembly

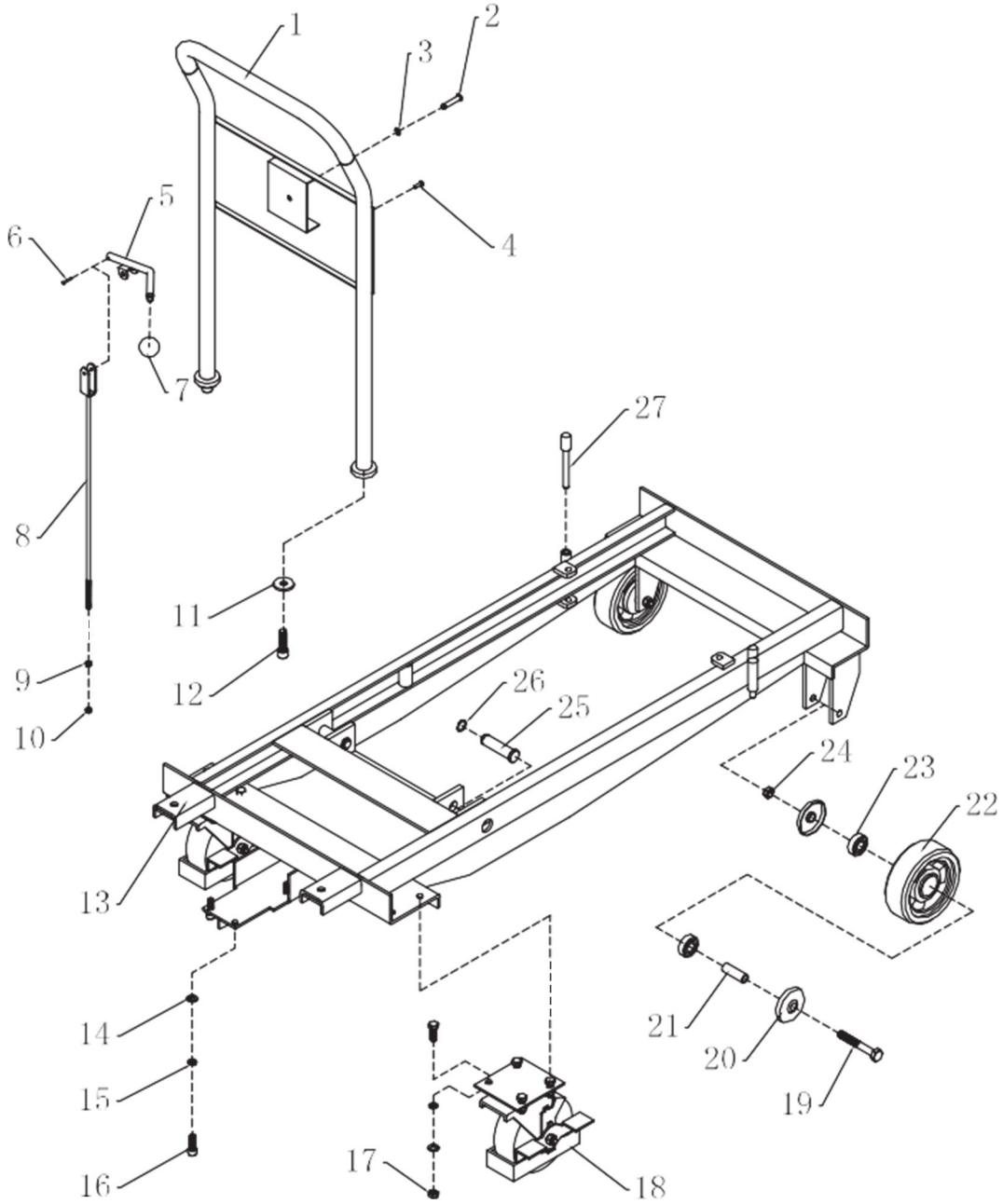

No.	Part name	Qty.	No.	Part name	Qty.
1	Handle weldment	1	15	Spring pad Φ10	11
2	Handle pin	1	16	Hexagon bolt M10 × 30	11
3	Split ring Φ 6	1	17	Nut M10	8
4	Blind rivet Φ 5 × 16	6	18	Rear wheel group Φ 150 × 50	2
5	Control handle weldment	1	19	Hexagon bolt M12 × 90	2
6	Rivet Φ 3 × 25	1	20	Bearing cover	4
7	Bakelite handball	1	21	Bolt sleeve	2
8	Handle pull rod weldment	1	22	front wheel	2
9	Nut M6	1	23	Bearing 6203	4

10	Lock nut M6	1	24	Jam nut M12	2
11	Handle seat gasket	2	25	Frame pin	2
12	Hexagon bolt M12 × 40	2	26	Shaft retaining ring Φ 20	2
13	Frame weldment	1	27	Limit shaft	2
14	Flat cushion Φ 10	11			

Fig.3 Cylinder assembly

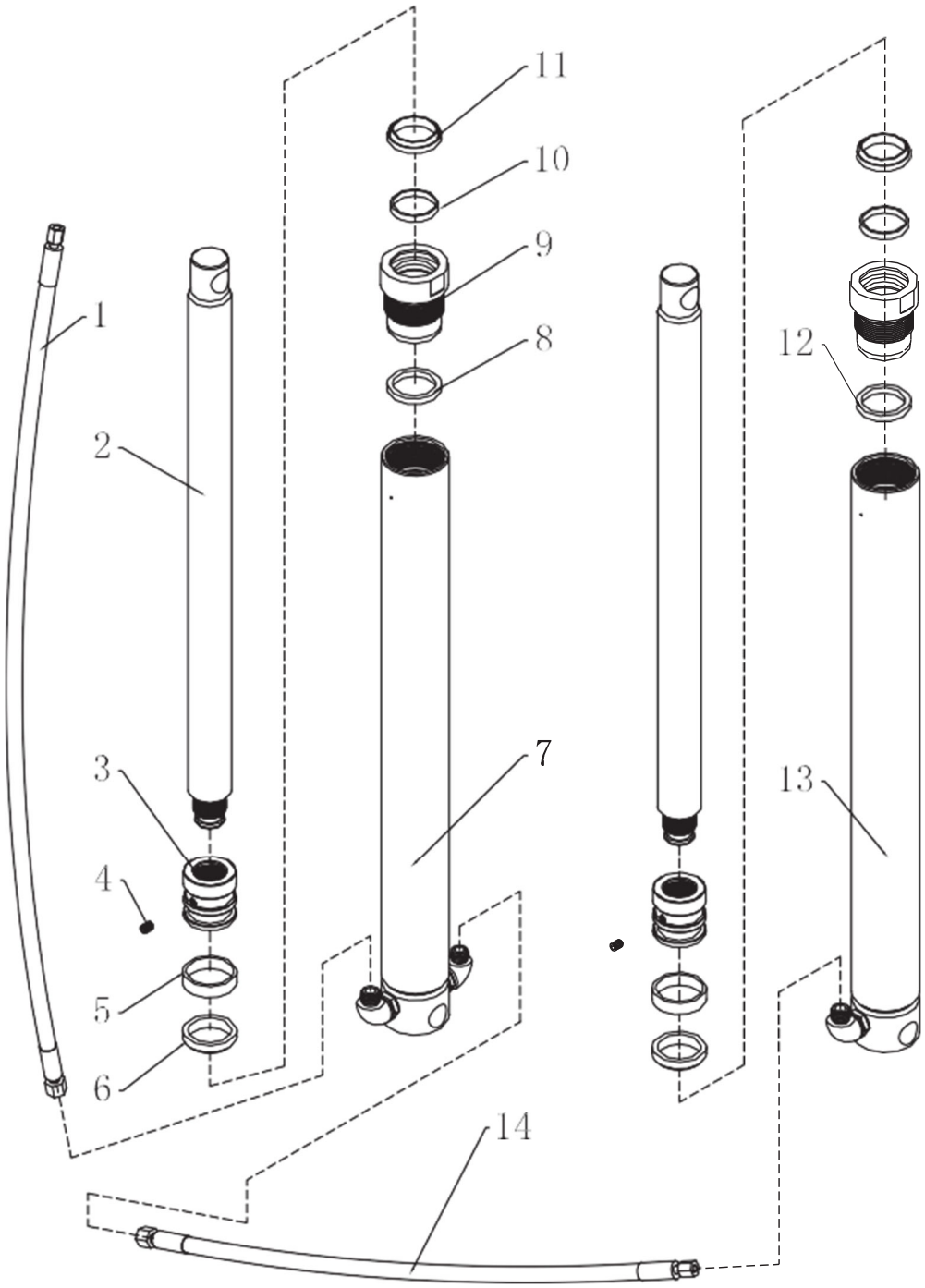

No.	Part name	Qty.	No.	Part name	Qty.
1	Tubing M14 × 1.5/800	1	8	Cylinder top sleeve 2	1
2	Lifting rod	2	9	Cylinder nut	2
3	piston	2	10	Wear resistant belt d35 × D32 × 5.2	2

4	Hexagon socket flat end set screw M6 × 8	2	11	Dust ring d40 × D32 × 5 / 6.5	2
5	Wear resistant belt d40 × D35 × 10	2	12	Cylinder top sleeve 1	1
6	Y-ring d40 × D32 × 8	2	13	Lifting cylinder weldment 2	1
7	Lifting cylinder weldment 1	1	14	Tubing M14 × 1.5/390	1

Fig.4 External cylinder assembly

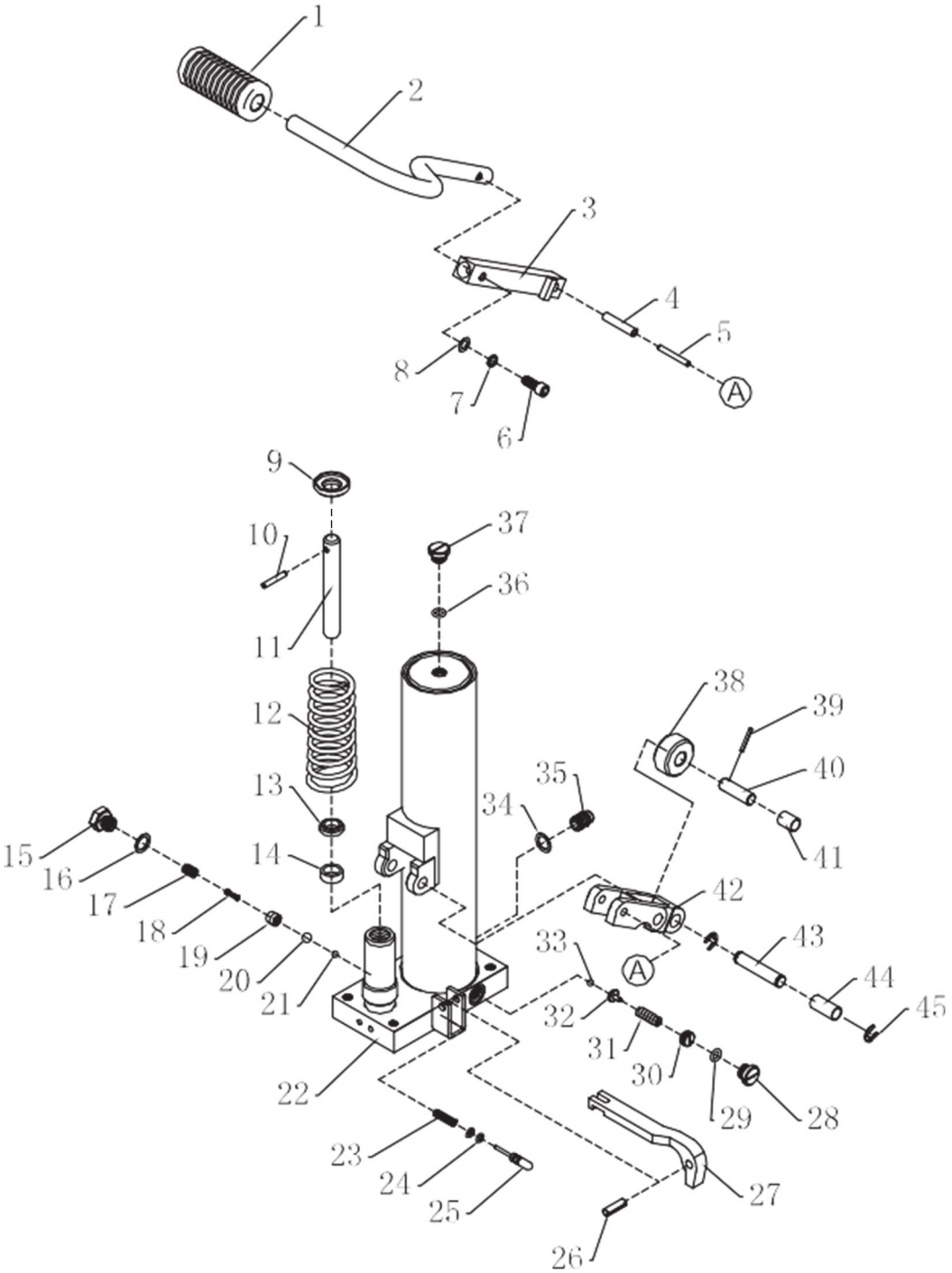

No.	Part name	Qty.	No.	Part name	Qty.
1	Rubber sleeve	1	24	O-ring D8 × 1.8	2
2	Pedal handle	1	25	Oil drain rod	1

3	Rocker weldment	1	26	Elastic pin Φ 8 × 25	1
4	Elastic pin Φ 8 × 40	1	27	Swing bar	1
5	Cylindrical pin Φ 5 × 40	1	28	Pressure regulating valve sealing screw	1
6	Hexagon socket screw M8 × 20	1	29	O-ring d11.2 × 2.65	1
7	Spring pad Φ 8	1	30	Pressure regulating screw	1
8	Flat cushion Φ 8	1	31	Pressure regulating spring	1
9	Spring pad	1	32	Pressure regulating spring seat	1
10	Cylindrical pin Φ 5 × 32	1	33	Steel ball s Φ 6	1
11	Compression bar	1	34	Combined washer Φ 14	1
12	Conical spring	1	35	Straight joint M14 × 1.5	1
13	Dust ring d24 × D16 × 4.5/6	1	36	O-ring d11.2 × 2.65	1
14	Y-ring d22 × D16 × 8	1	37	Oil hole screw	1
15	Oil valve sealing bolt	1	38	Roller	1
16	Copper washer	1	39	Elastic pin Φ 3 × 24	1
17	Valve sleeve spring	1	40	Compression axle	1
18	Spool spring	1	41	Composite bushing d12 × D14 × 18	1
19	Valve sleeve	1	42	Step on the lever	1
20	Steel ball s Φ 9	1	43	Cylinder trunnion	1
21	Steel ball s Φ 6	2	44	Composite bushing d12 × D14 × 30	1
22	Valve plate weldment	1	45	Split ring Φ 9	2
23	Oil drain rod spring	1			

Umwelt – und Entsorgungshinweise

Hersteller an Verbraucher

Sehr geehrte Damen und Herren,

gebrauchte Elektro – und Elektronikgeräte dürfen gemäß europäischer Vorgaben **[1]** nicht zum unsortierten Siedlungsabfall gegeben werden, sondern müssen getrennt erfasst werden. Das Symbol der Abfalltonne auf Rädern weist auf die Notwendigkeit der getrennten Sammlung hin. Helfen auch Sie mit beim Umweltschutz. Sorgen Sie dafür, dieses Gerät, wenn Sie es nicht mehr weiter nutzen wollen, in die hierfür vorgesehenen Systeme der Getrenntsammlung zu geben.

In Deutschland sind Sie gesetzlich **[2]** verpflichtet, ein Altgerät einer vom unsortierten Siedlungsabfall getrennten Erfassung zuzuführen. Die öffentlich – rechtlichen Entsorgungsträger (Kommunen) haben hierzu Sammelstellen eingerichtet, an denen Altgeräte aus privaten Haushalten ihres Gebietes für Sie kostenfrei entgegengenommen werden. Möglicherweise holen die rechtlichen Entsorgungsträger die Altgeräte auch bei den privaten Haushalten ab.

Bitte informieren Sie sich über Ihren lokalen Abfallkalender oder bei Ihrer Stadt – oder Gemeindeverwaltung über die in Ihrem Gebiet zur Verfügung stehenden Möglichkeiten der Rückgabe oder Sammlung von Altgeräten.

[1] RICHTLINIE 2002/96/EG DES EUROPÄISCHEN PARLAMENTS UND DES RATES
ÜBER ELEKTRO – UND ELEKTRONIK – ALTGERÄTE

[2] Gesetz über das Inverkehrbringen, die Rücknahme und die umweltverträgliche Entsorgung
von Elektro – und Elektronikgeräten (Elektro – und Elektronikgerätegesetz – ElektroG).

Utylizacja produktu
Produkty elektryczne i elektroniczne po zakończeniu okresu eksploatacji wymagają segregacji i oddania ich do wyznaczonego punktu odbioru. Nie wolno wyrzucać produktów elektrycznych razem z odpadami gospodarstwa domowego. Zgodnie z dyrektywą WEEE 2012/19/UE obowiązującą w Unii Europejskiej, urządzenia elektryczne i elektroniczne wymagają segregacji i utylizacji w wyznaczonych miejscach. Dbając o prawidłową utylizację, przyczyniasz się do ochrony zasobów naturalnych i zmniejszasz negatywny wpływ oddziaływania na środowisko, człowieka i otoczenie. Zgodnie z krajowym prawodawstwem, nieprawidłowe usuwanie odpadów elektrycznych i elektronicznych może być karane!

For the disposal of the device please consider and act according to the national and local rules and regulations.

CONTACT

expondo Polska sp. z o.o. sp. k.

ul. Nowy Kisielin – Innowacyjna 7
66-002 Zielona Góra | Poland, EU

e-mail: info@expondo.com